REAR

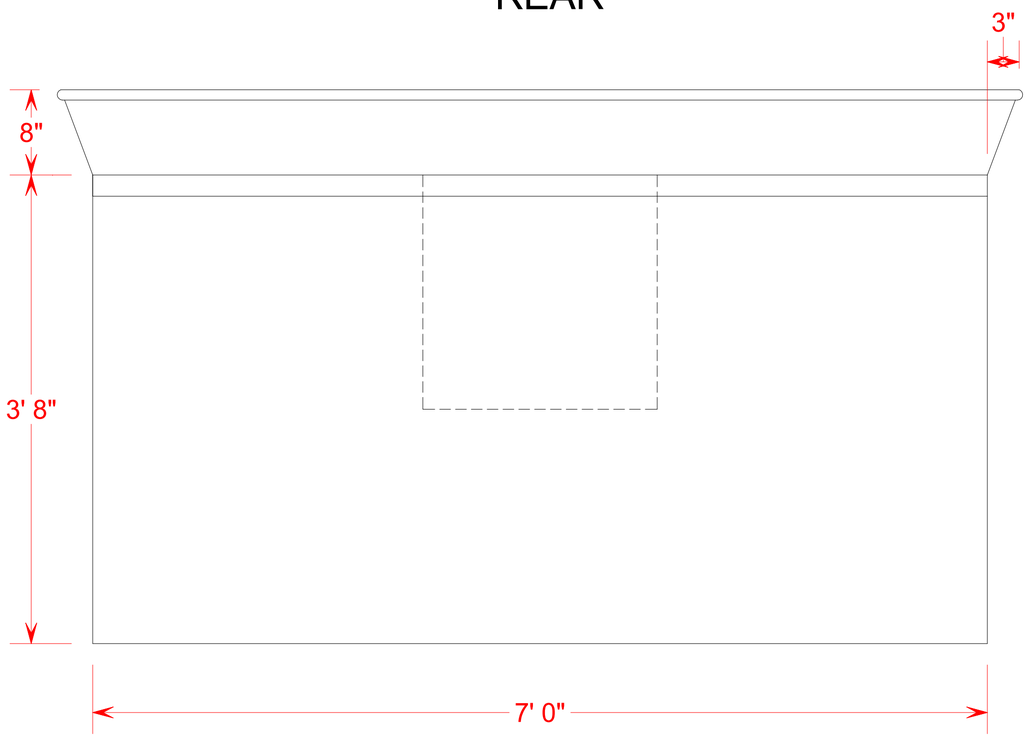

FRONT

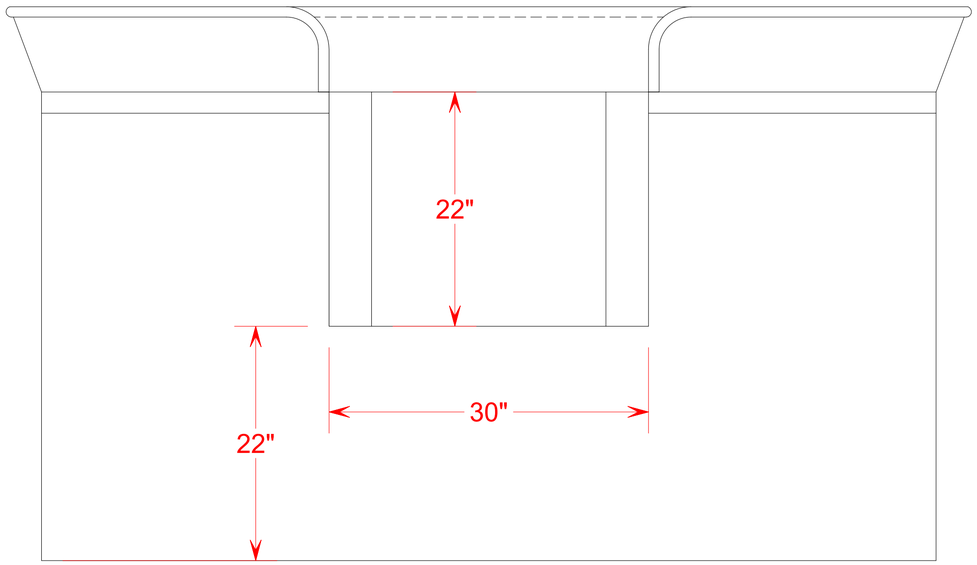

SIDE

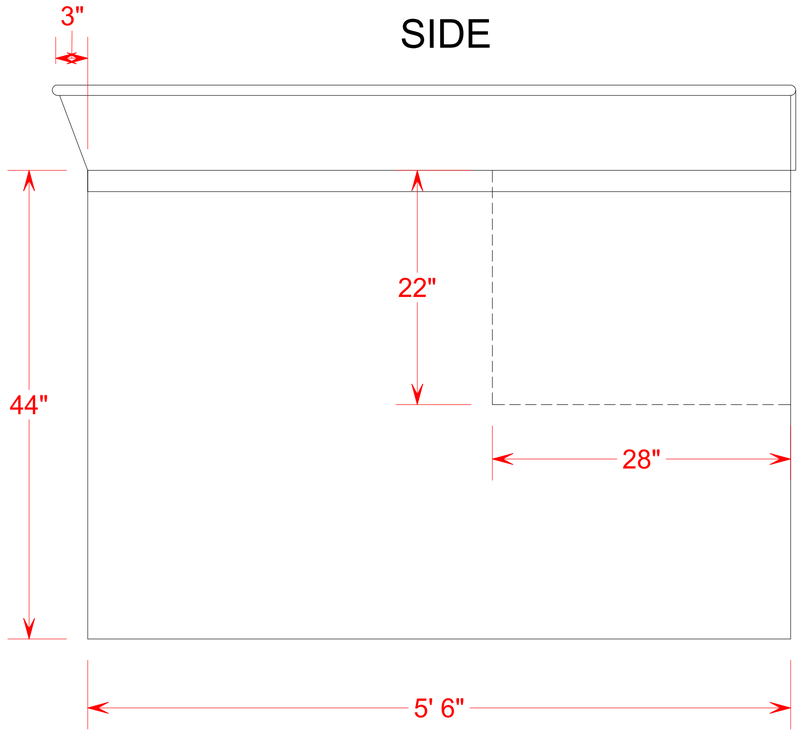

CLIMAX 25 Ton
Bunker & Cistern

May 1902
Mar. 1907

No Dwg. Number

Drawn by:
W. E. Simonton III

July 26, 2020

1" Half Round Trim per 1551. Shown but not specified.