FINGER RADII CENTERS	
0.3125	(0.00, 0.00)
0.251A	(0.00, 0.00)
0.251B	(-0.755726, -0.685488)
1.3125	(0.0536604, -0.999073)
0.7656	(-0.29881,-0.573978)
1.562	(0.00, 0.00)
0.126	(0.00, -1.49899)
0.5625	(0.0332779, -0.874367)
0.1875	(-1.24331, -0.610423)

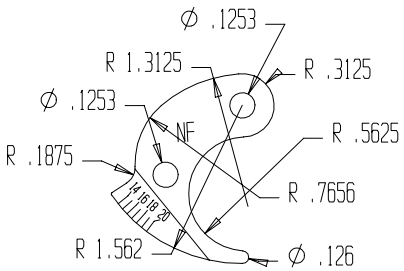

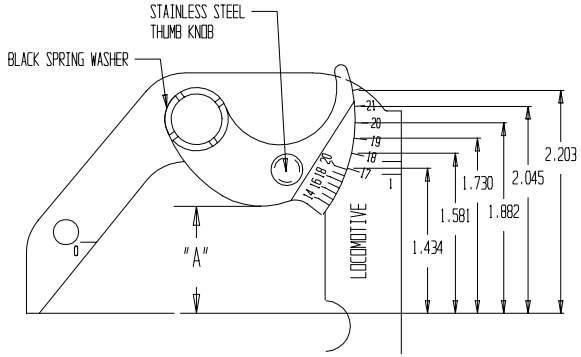

	A	1/16
20 AT 22	1.375	22
20 AT 21	1.313	21
20 AT 20	1.250	20
20 AT 19	1.188	19
20 AT 18	1.125	18
20 AT 17	1.063	17

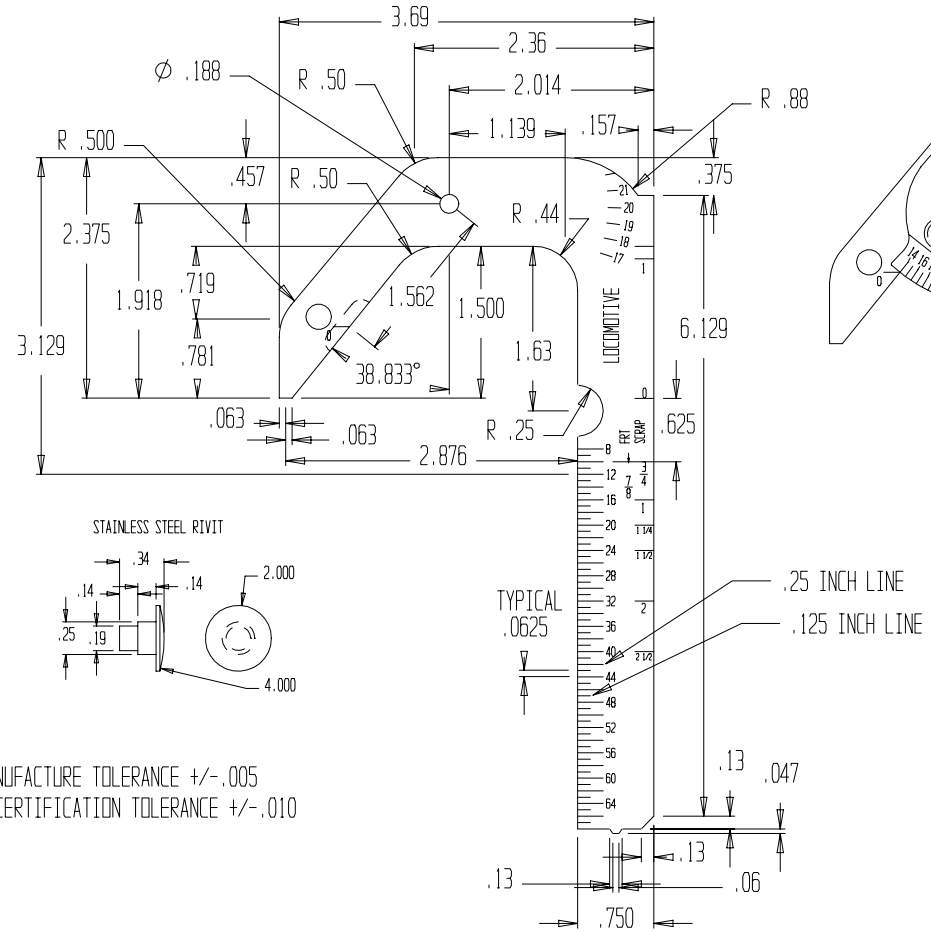

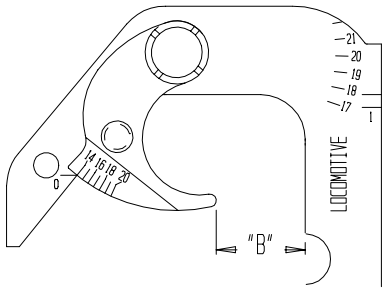

"B" DIMENSION		
AT	DECIMAL	1/16
20	1.250	20
19	1.1875	19
18	1.125	18
17	1.0625	17
16	1.000	16
15	0.9375	15
14	0.875	14

REFERENCE:
AAR STANDARD S-630-98

MODIFIED BODY LENGTH
FOR LARGE WHEELS

MODIFIED FINGER SCALE
READS FLANGE THICKNESS
IN ACTUALS 1/16THS

NOT FOR AAR BILLING
OR AAR METAL REMOVAL CALCULATIONS

MANUFACTURE TOLERANCE +/-.005
RECERTIFICATION TOLERANCE +/-.010

SCALE: .5X

WINCHESTER INDUSTRIES INC.

LOCOMOTIVE STEEL WHEEL GAGE

SIZE	Job#	DWG NO.	Disk	REV
A		W600-2A		A

CUSTOMER | ENG JCD 2/22/99